INDUSTRIUM
Composite Material

WPC MALE-FEMALE FENCE SEPARATOR

Used to create a 10 mm gap between profiles

- 100% Recyclable, Environmentally friendly
- Cost-effective
- Minimal to zero maintenance

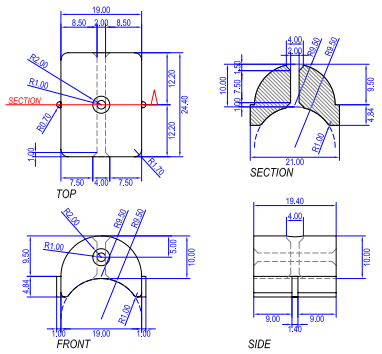

SCMF-100

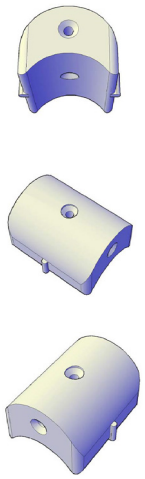

Product Family

WPC FEMALE-FEMALE FENCE SEPARATOR
WPC MALE-MALE FENCE SEPARATOR

Related Products

WPC FENCING COLUMN
WPC FENCING CORNER COLUMN
WPC FENCING COLUMN CORNER FILLER
WPC FENCING BOTTOM PROFILE
WPC FENCING TOP CLOSER PROFILE
WPC FENCING MIDDLE SEPARATOR PROFLE
WPC FENCING COLUMN CAP
WPC FENCING COLUMN FILLER
WPC CENTER PROFILE
WPC GROOVE CENTER PROFILE

Quality

All our products are produced in quality controlled environment taking into consideration food safety and hygiene standards under certified ISO 9001:2000 & ISO 9001:2008 and GMP quality management system. Our Quality System is regularly audited by third party.

TÜV NORD
EN ISO 9001 : 2008
CERTIFIED

Disclaimer

Consumer Safety is extremely important for Industrium. Therefore all our food-contact materials and articles are produced taking into consideration national and international regulations, and do not transfer their constituents to the food under normal or foreseeable conditions of use. The foregoing data are without engagement and constitute the best of our knowledge; they are reliable if applied correctly and adapted to local conditions and cannot be taken as any guarantee, since the processing at the end-user are beyond our control. The above mentioned guidelines are supplied to assist the buyer in determining the proper use of products. However, because every food supplier's recipes, ingredients, processes and supply chain are unique, these guidelines are not a substitute for product testing. Confirmation of product acceptability under customer's specific conditions of use must be done by the customer.

Properties

Material	:PP
Material composition	:99.2% Polypropylene 0.8% Masterbatch
Manufacturing Process	:Injection Moulding
Length (mm)	:24.4
Width (mm)	:21.00
Weight (g)	:4.40±5%
Gap Length (mm)	:10
Color(s)	:Standard: Brown, Grey Customizable

Packaging

Packaging	:Plastic Bag
Pieces per Bag	:As needed

Ordering Option(s)

Custom Color

www.industrium-group.com
P.O. Box: 35016 Abu Dhabi – UAE, Tel: +971 2 558 2725,
Fax: +971 2 558 9078, info@industrium-group.com

Rev: 161127